EOLP-1596-80-RN Series

1550nm SFP+ single-Mode Transceiver, With Diagnostic Monitoring
Duplex SFP+ Transceiver
RoHS 6 Compliant

Features

- 1550nm cooled EML Transmitter
- High sensitivity APD Receiver
- Distance up to 80km over SMF
- Single 3.3V Power supply and TTL Logic Interface
- Duplex LC Connector Interface
- Built-in dual CDR
- Hot Pluggable
- Power Dissipation < 2W
- Dispersion Tolerance 1600ps/nm
- Operating Case Temperature
  Standard: 0℃~+70℃
- Compliant with SFF-8431 MSA
- Compliant with SFF-8432 MSA
- Compliant with SFF-8472 MSA

Applications

- STM64/OC192
- Other Optical Links

Ordering information

Part No.	Data Rate	Laser	Temp.	Distance	CDR	DDMI
EOLP-1596-80-RN*note1	Up to 11.3Gbps	1550nm EML	Standard	80km	YES	YES

*Note1: Standard version

*The product image only for reference purpose.

Regulatory Compliance*

Product Certificate	Certificate Number	Applicable Standard
TUV	R50135086	EN 60950-1:2006+A11+A1+A12+A2
		EN 60825-1:2014
		EN 60825-2:2004+A1+A2
UL	E317337	UL 60950-1
		CSA C22.2 No. 60950-1-07
EMC CE	AE 50285865 0001	EN 55022:2010
		EN 55024:2010
FCC	WTF14F0514417E	47 CFR PART 15 OCT., 2013
FDA	/	CDRH 1040.10
ROHS	/	2011/65/EU

* The above certificate number updated to June 2014, because some certificate will be updated every year, such as FCC, FDA and ROHS. For the latest certification information, please check with Eoptolink.

Product Description

The EOLP-1596-80-RN series single mode transceiver is small form factor pluggable module for duplex optical communications of 10G. It is with the SFP+ 20-pin connector to allow hot plug capability.

This module is designed for single mode fiber and operates at a nominal wavelength of 1550 nm. The transmitter section uses a 1550nm EML, which is class 1 laser compliant according to International Safety Standard IEC-60825.

The receiver section uses an integrated InGaAs detector preamplifier (IDP) mounted in an optical header and a limiting post-amplifier IC.

Absolute Maximum Ratings*note2

Parameter	Symbol	Min.	Max.	Unit
Storage Temperature	T_S	-40	+85	°C
Supply Voltage	V_{CC}	-0.5	3.6	V

Note2: Exceeding any one of these values may destroy the device permanently.

Recommended Operating Conditions

Parameter	Symbol	Min.	Typical	Max.	Unit
Operating Case Temperature	T_C	0		+70	°C
Power Supply Voltage	V_{CC}	3.15	3.3	3.45	V
Power Supply Current	I_{CC}			606	mA
Surge Current	I_{Surge}			+30	mA
Baud Rate	EOLP-1596-80-RN			11.3	Gbit/s

Performance Specifications - Electrical

Parameter	Symbol	Min.	Typ.	Max	Unit	Notes
Transmitter						
CML Inputs(Differential)	Vin	150		1200	mVpp	AC coupled inputs
Input Impedance (Differential)	Zin	85	100	115	ohms	Rin > 100 kohms @ DC
Tx_DISABLE Input Voltage - High		2		Vcc+0.3	V	
Tx_DISABLE Input Voltage - Low		0		0.8	V	
Tx_FAULT Output Voltage - High		2		Vcc+0.3	V	Io = 400μA; Host Vcc
Tx_FAULT Output Voltage - Low		0		0.5	V	Io = -4.0mA
Receiver						
CML Outputs (Differential)	Vout	350		700	mVpp	AC coupled outputs
Output Impedance (Differential)	Zout	85	100	115	ohms	
Rx_LOS Output Voltage - High		2		Vcc+0.3	V	Io = 400μA; Host Vcc
Rx_LOS Output Voltage - Low		0		0.8	V	Io = -4.0mA
MOD_DEF (2:0)	VoH	2.5			V	With Serial ID
	VoL	0		0.5	V	

Optical and Electrical Characteristics

Parameter	Symbol	Min.	Typical	Max.	Unit
9μm Core Diameter SMF			80		km
Transmitter					
Centre Wavelength	λ_C	1528	1550	1565	nm
Spectral Width (-20dB)	$\Delta\lambda$			1	nm
Side Mode Suppression Ratio	SMSR	30			dB
Average Output Power*note3	$P_{out, AVG}$	0		5	dBm
Extinction Ratio	ER	8.2			dB
Transmitter and Dispersion Penalty	TDP			2	dB
Average Power of OFF Transmitter				-30	dBm
Relative Intensity Noise	RIN			-128	dB/Hz
Input Differential Impedance	Z_{IN}	90	100	110	Ω
TX Disable Assert Time	t_off			10	us

Receiver					
Centre Wavelength	λ_C	1260		1600	nm
Sensitivity**note4	P_{IN}			-23	dBm
Receiver Overload	P_{MAX}	-8			dBm
Output Differential Impedance	P_{IN}	90	100	110	Ω
LOS De-Assert	LOS_D			-24	dBm
LOS Assert	LOS_A	-36			dBm

Note3: Output is coupled into a 9/125um SMF.

Note4: Minimum average optical power measured at the BER less than 1E-12, back to back. The measure pattern is PRBS 2^{31}-1.

SFP+ Transceiver Electrical Pad Layout

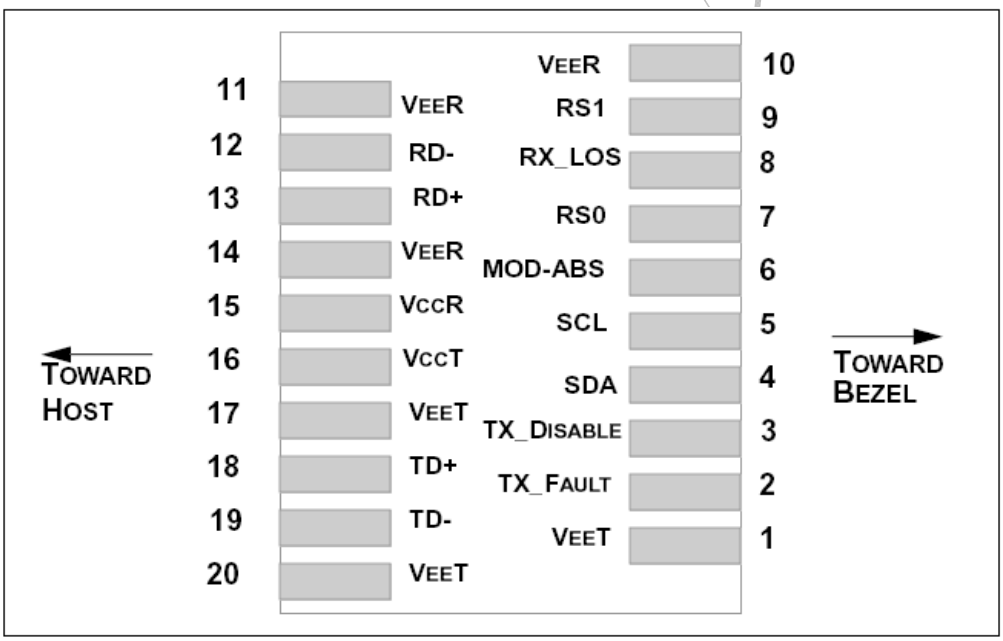

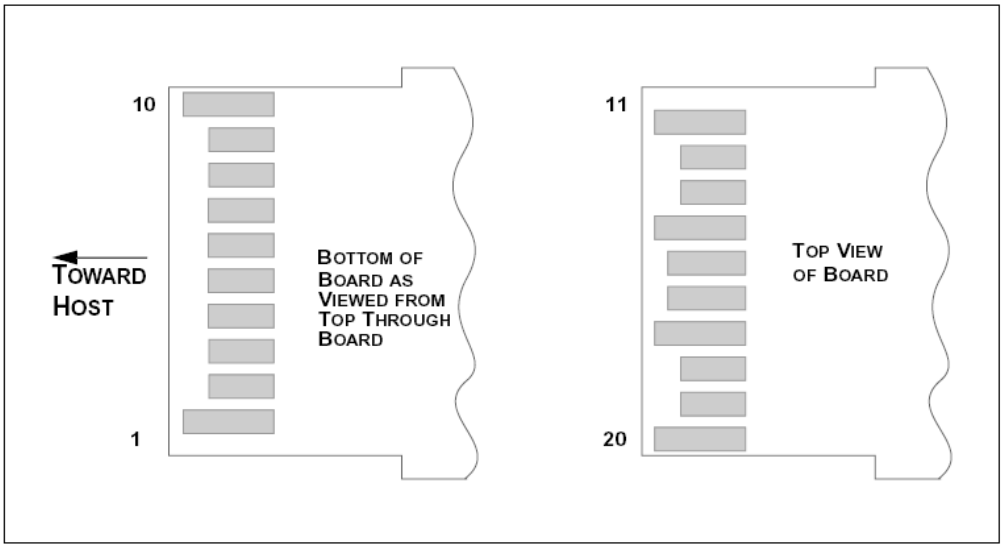

Pin Function Definitions

Pin Num.	Name	FUNCTION	Plug Seq.	Notes
1	VeeT	Transmitter Ground	1	Note 5
2	TX Fault	Transmitter Fault Indication	3	Note 1
3	TX Disable	Transmitter Disable	3	Note 2, Module disables on high or open
4	SDA	Module Definition 2	3	2-wire Serial Interface Data Line.
5	SCL	Module Definition 1	3	2-wire Serial Interface Clock.
6	MOD_ABS	Module Definition 0	3	Note 3
7	RS0	RX Rate Select (LVTTL).	3	Rate Select 0, optionally controls SFP+ module receiver. This pin is pulled low to VeeT with a >30K resistor
8	LOS	Loss of Signal	3	Note 4
9	RS1	TX Rate Select (LVTTL).	1	Rate Select 1, optionally controls SFP+ module transmitter. This pin is pulled low to VeeT with a >30K resistor
10	VeeR	Receiver Ground	1	Note 5
11	VeeR	Receiver Ground	1	Note 5
12	RD-	Inv. Received Data Out	3	Note 6
13	RD+	Received Data Out	3	Note 6
14	VeeR	Receiver Ground	1	Note 5
15	VccR	Receiver Power	2	3.3 ± 5%, Note 7
16	VccT	Transmitter Power	2	3.3 ± 5%, Note 7
17	VeeT	Transmitter Ground	1	Note 5
18	TD+	Transmit Data In	3	Note 8
19	TD-	Inv. Transmit Data In	3	Note 8
20	VeeT	Transmitter Ground	1	Note 5

Notes:

1) TX Fault is an open collector/drain output, which should be pulled up with a 4.7K – 10KΩ resistor on the host board. Pull up voltage between 2.0V and VccT/R+0.3V. When high, output indicates a laser fault of some kind. Low indicates normal operation. In the low state, the output will be pulled to < 0.8V.

2) TX disable is an input that is used to shut down the transmitter optical output. It is pulled up within the module with a 4.7K – 10 KΩ resistor. Its states are:
Low (0 – 0.8V): Transmitter on
(>0.8, < 2.0V): Undefined
High (2.0 – 3.465V): Transmitter Disabled
Open: Transmitter Disabled

3) Module Absent, connected to VeeT or VeeR in the module.

4) LOS (Loss of Signal) is an open collector/drain output, which should be pulled up with a 4.7K – 10KΩ resistor. Pull up voltage between 2.0V and VccT/ R+0.3V. When high, this output indicates the received optical power is below the worst-case receiver sensitivity (as defined by the standard in use). Low indicates normal operation. In the low state, the output will be pulled to < 0.8V.

5) The module signal ground contacts, VeeR and VeeT, should be isolated from the module case.

6) RD-/+: These are the differential receiver outputs. They are AC coupled 100Ω differential lines which should be terminated with 100Ω (differential) at the user SERDES. The AC coupling is done inside the module and is thus not required on the host board. The voltage swing on these lines will be between 350 and 700 mV differential (175 –350 mV single ended) when properly terminated.

7) VccR and VccT are the receiver and transmitter power supplies. They are defined as 3.3V ±5% at the SFP+ connector pin. Maximum supply current is 606mA. Recommended host board power supply filtering is shown below. Inductors with DC resistance of less than 1 ohm should be used in order to maintain the required voltage at the SFP+ input pin with 3.3V supply voltage. When the recommended supply-filtering network is used, hot plugging of the SFP+ transceiver module will result in an inrush current of no more than 30mA greater than the steady state value. VccR and VccT may be internally connected within the SFP+ transceiver module.

8) TD-/+: These are the differential transmitter inputs. They are AC-coupled, differential lines with 100Ω differential termination inside the module. The AC coupling is done inside the module and is thus not required on the host board. The inputs will accept differential swings of 150 – 1200 mV (75 – 600mV single-ended).

EEPROM

The serial interface uses the 2-wire serial CMOS EEPROM protocol defined for the ATMEL AT24C02/04 family of components. When the serial protocol is activated, the host generates the serial clock signal (SCL). The positive edge clocks data into those segments of the EEPROM that are not writing protected within the SFP+ transceiver. The negative edge clocks data from the SFP+ transceiver. The serial data signal (SDA) is bi-directional for serial data transfer. The host

uses SDA in conjunction with SCL to mark the start and end of serial protocol activation. The memories are organized as a series of 8-bit data words that can be addressed individually or sequentially.

The Module provides diagnostic information about the present operating conditions. The transceiver generates this diagnostic data by digitization of internal analog signals. Calibration and alarm/warning threshold data is written during device manufacture. Received power monitoring, transmitted power monitoring, bias current monitoring, supply voltage monitoring and temperature monitoring all are implemented. If the module is defined as external calibrated, the diagnostic data are raw A/D values and must be converted to real world units using calibration constants stored in EEPROM locations 56 – 95 at wire serial bus address A2h. The digital diagnostic memory map specific data field define as following .For detail EEPROM information, please refer to the related document of SFF 8472 Rev 10.2.

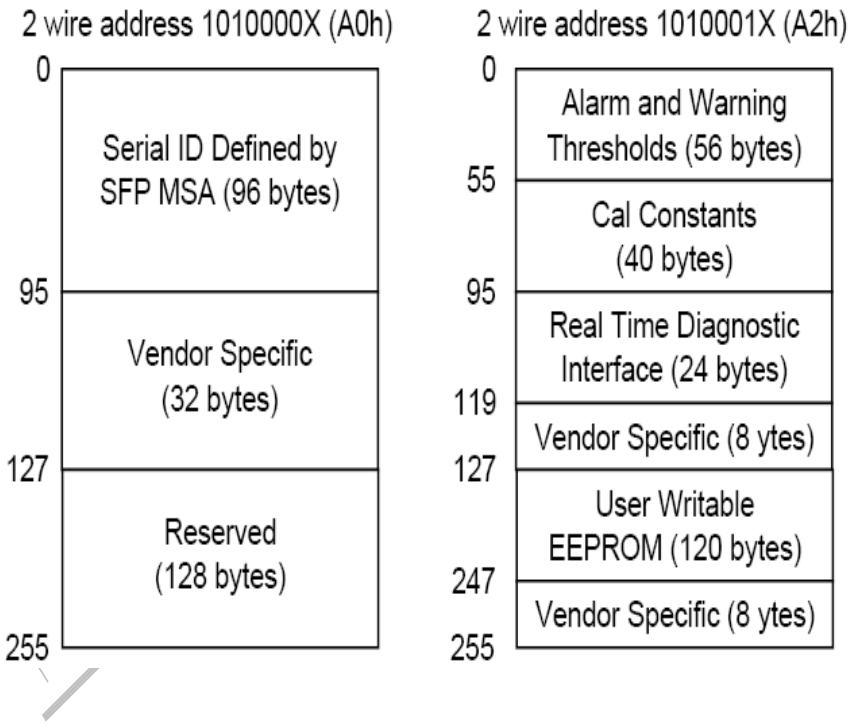

Recommend Circuit Schematic

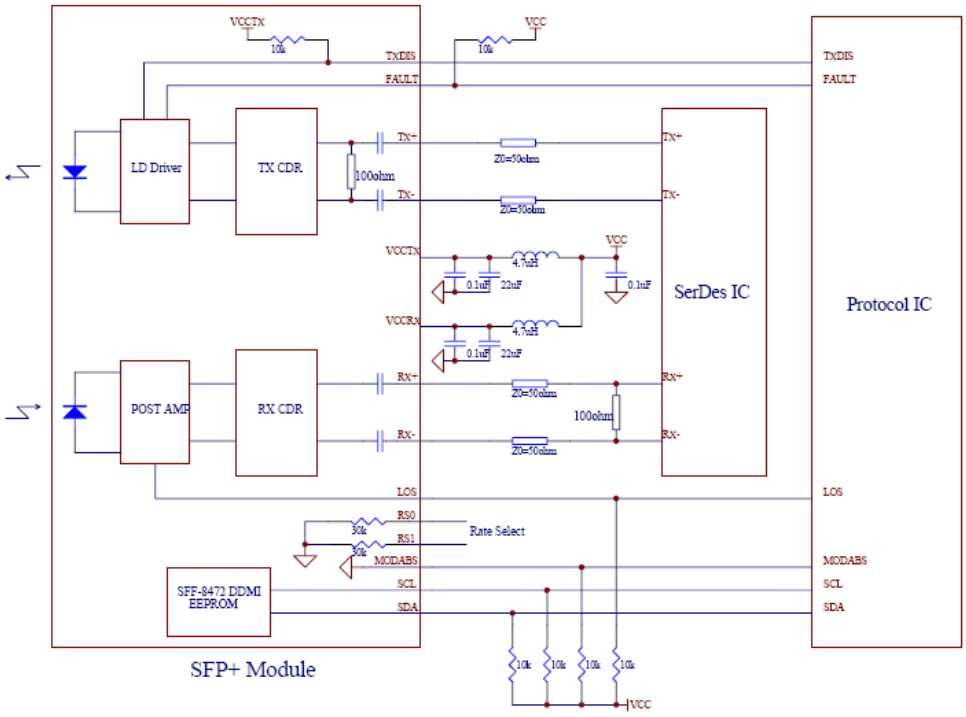

Mechanical Specifications*

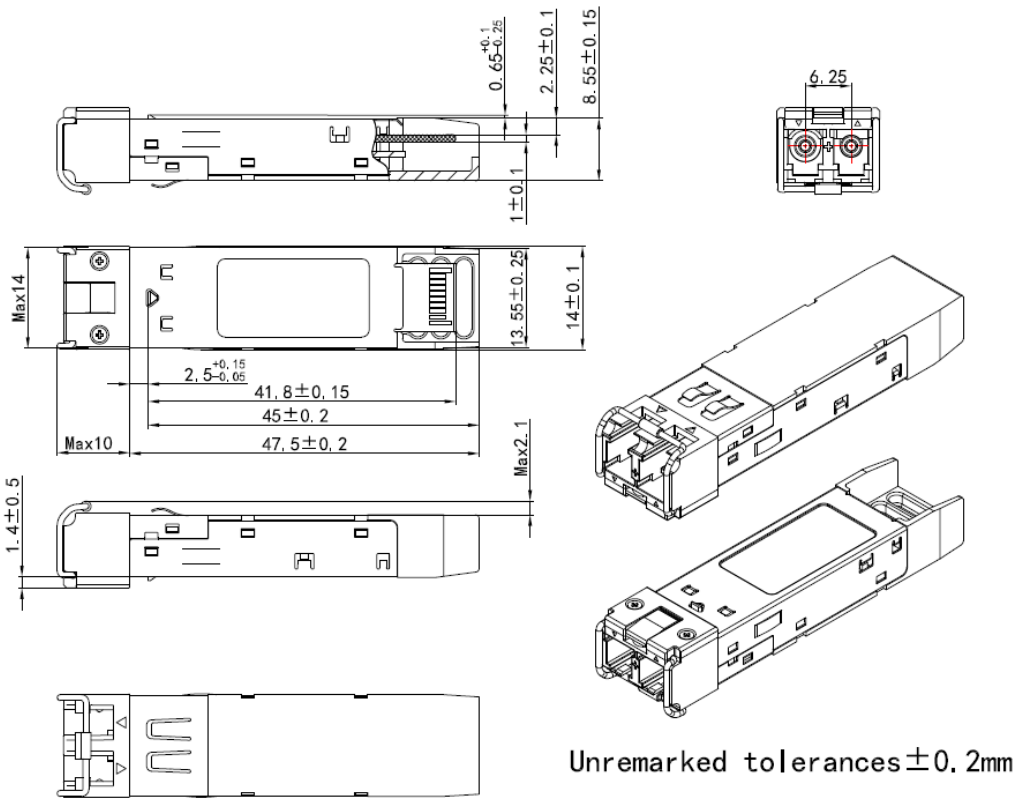

*This 2D drawing only for reference, please check with Eoptolink before ordering

Eye Safety

This single-mode transceiver is a Class 1 laser product. It complies with IEC-60825 and FDA 21 CFR 1040.10 and 1040.11. The transceiver must be operated within the specified temperature and voltage limits. The optical ports of the module shall be terminated with an optical connector or with a dust plug.

Obtaining Document

You can visit our website:

http://www.eoptolink.com

Or contact Eoptolink Technology Inc., Ltd. Listed at the end of the documentation to get the latest document.

Revision History

Revision	Initiated	Reviewed	Approved	DCN	Release Date
V1.a	Alex	Kelly	.	New released	July 16, 2012
V1.b	Angela	Kelly		Update mechanical spec. & power dissipation & Er & application.	July 24, 2012
V1.c	Angela	Kelly		Update photo & schematic spec.	July 28, 2012
V1.d	Angela	Kelly		Update Power Dissipation & Icc	July 31, 2012
V1.e	JP.jiang Abby	Kelly		Update LOSA	Jan 16, 2013
V1.f	Angela	Kelly		Correct note5 and pin definition notes	July 1, 2013
V1.g	Abby	Kelly		Update TDP from 3dB to 2dB	Dec 17, 2013
V2.0	Abby	Kelly/Vina		Update Regulatory Compliance and Mechanical Specifications	Feb 5, 2015
V2.a	Angela	Kelly/Eason William/ Chao.Wang	Phlio	Update the picture, 2D drawing and contact. Update the max data rate.	March 23, 2018

Eoptolink

Notice:

Eoptolink reserves the right to make changes to or discontinue any optical link product or service identified in this publication, without notice, in order to improve design and/or performance. Applications that are described herein for any of the optical link products are for illustrative purposes only. Eoptolink makes no representation or warranty that such applications will be suitable for the specified use without further testing or modification.

Contact:

Add: No.127 West Wulian Street, Gongxing Town, Shuangliu district, Chengdu City, Sichuan, China.

Tel: (+86) 028-67087999

Fax: (+86) 28-67087979-8010

Postal: 610213

E-mail:sales@eoptolink.com

http://www.eoptolink.com

Eoptolink